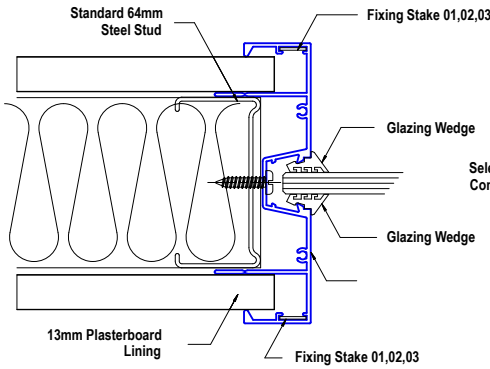
Standard 64mm
Steel Stud
Fixing Stake 01,02,03
Glazing Wedge
Glazing Wedge
13mm Plasterboard
Lining
Fixing Stake 01,02,03

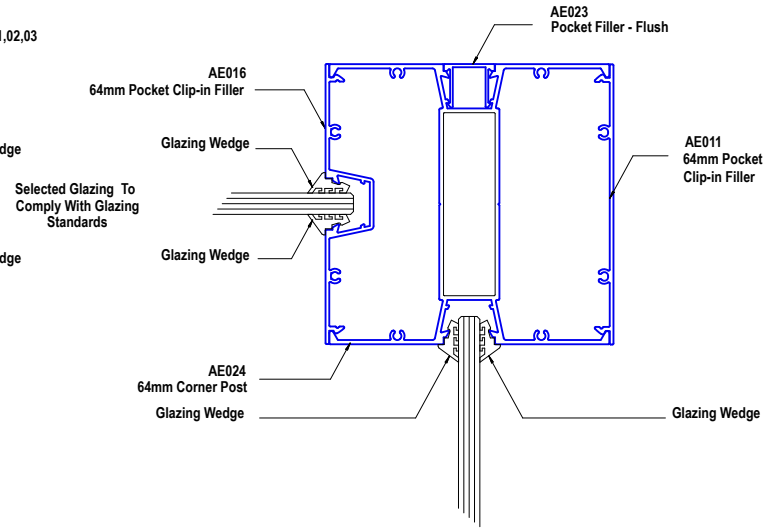
AE023
Pocket Filler - Flush
AE016
64mm Pocket Clip-in Filler
Glazing Wedge
Selected Glazing To
Comply With Glazing
Standards
Glazing Wedge
AE011
64mm Pocket
Clip-in Filler
AE024
64mm Corner Post
Glazing Wedge
Glazing Wedge

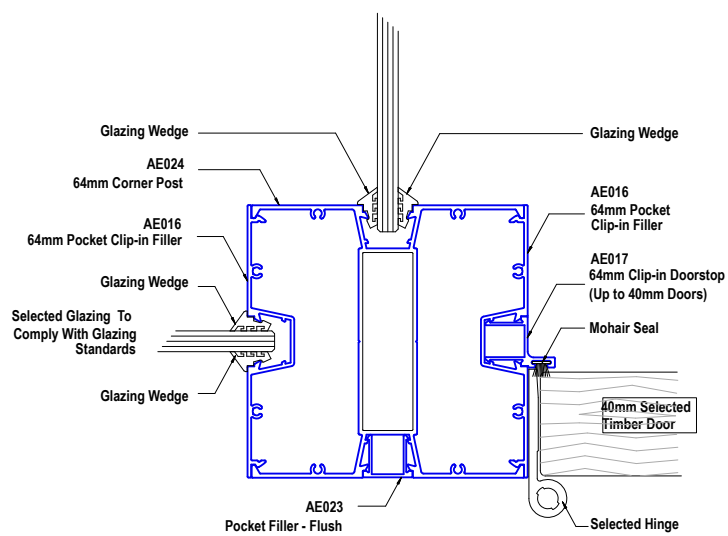
Selected Glazing To
Comply With Glazing
Standards
Glazing Wedge
Glazing Wedge
AE024
64mm Corner Post
AE016
64mm Pocket
Clip-in Filler
AE016
64mm Pocket Clip-in Filler
AE017
64mm Clip-in Doorstop
(Up to 40mm Doors)
Glazing Wedge
Selected Glazing To
Comply With Glazing
Standards
Mohair Seal
Glazing Wedge
40mm Selected
Timber Door
AE023
Pocket Filler - Flush
Selected Hinge